इंटरनेट मानक

Disclosure to Promote the Right To Information

Whereas the Parliament of India has set out to provide a practical regime of right to information for citizens to secure access to information under the control of public authorities, in order to promote transparency and accountability in the working of every public authority, and whereas the attached publication of the Bureau of Indian Standards is of particular interest to the public, particularly disadvantaged communities and those engaged in the pursuit of education and knowledge, the attached public safety standard is made available to promote the timely dissemination of this information in an accurate manner to the public.

"जानने का अधिकार, जीने का अधिकार"
Mazdoor Kisan Shakti Sangathan
"The Right to Information, The Right to Live"

"पुराने को छोड नये के तरफ"
Jawaharlal Nehru
"Step Out From the Old to the New"

IS 8907 (1987): Ice Pitons for Mountaineering [PGD 27: Mountaineering Equipment]

"ज्ञान से एक नये भारत का निर्माण"
Satyanarayan Gangaram Pitroda
"Invent a New India Using Knowledge"

Act Number 22 of 2005
The Indian Parliament
RIGHT TO INFORMATION

Made Available By
Public.Resource.Org

"ज्ञान एक ऐसा खजाना है जो कभी चुराया नहीं जा सकता है"
Bhartṛhari—Nītiśatakam
"Knowledge is such a treasure which cannot be stolen"

BLANK PAGE

BRUTUM FULMEN

IGNORANTIA JURIS NON EXCUSAT

PROTECTED BY COPYRIGHT

UDC 796·52·022 : 685·723



*Indian Standard*

Reaffirmed 2001

# SPECIFICATION FOR ICE PITONS FOR MOUNTAINEERING

*( First Revision )*

**1. Scope** — Covers the requirements for ice pitons for mountaineering.

**2. Application** — Ice piton is a piece of metal designed to be hammered or screwed in ice and to be used as a means of static belay, running belay or as an artificial aid. The piton consists of a blade or screw and a head having a hole or provided with a hole of such dimensions as to allow the passage of one or two carabiners ( *see* IS : 8533-1977 'Specification for general purpose carabiners for mountaineering'). The loads that may be applied to various types of pitons depend on their design and the angle between the body of piton and rope belay.

**3. Shape and Dimensions**

**3.1** *Ice Piton, Plain (Type A)*

All dimensions in millimetres.

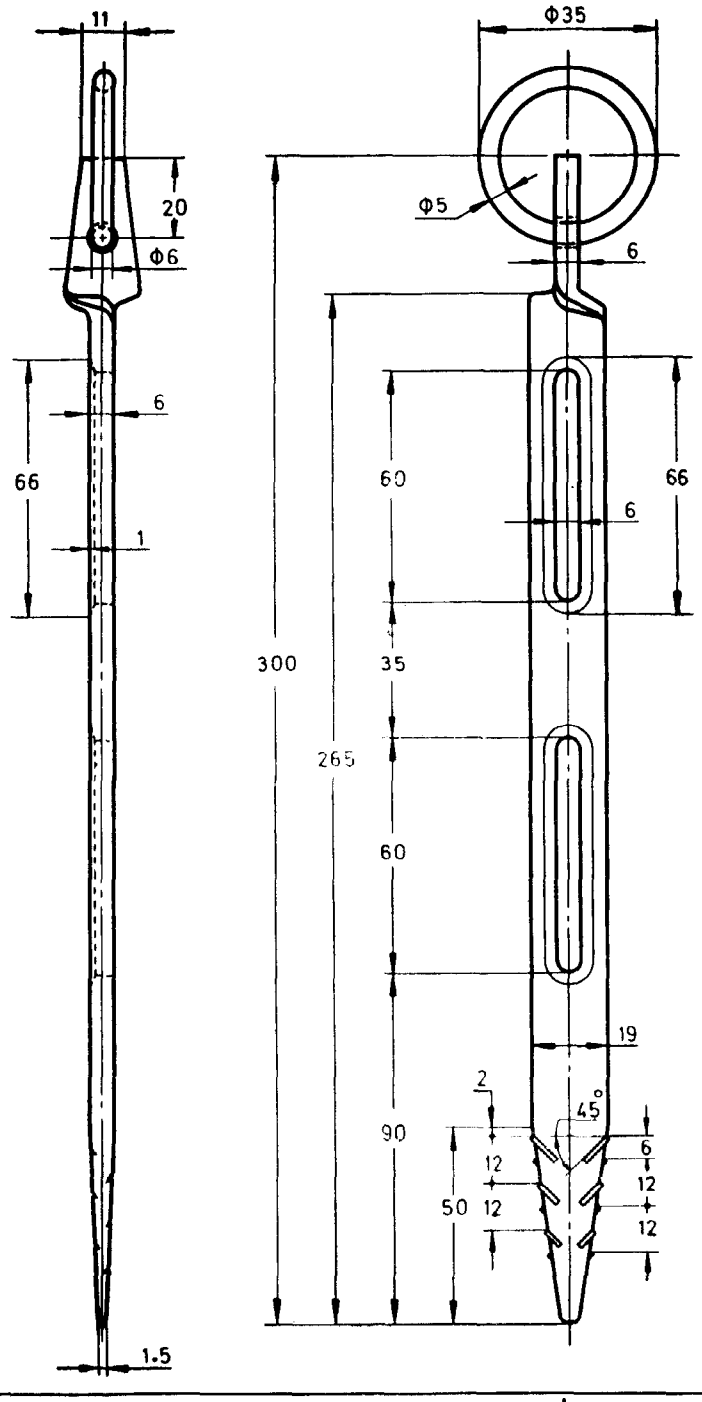


Mountaineering Equipment Sectional Committee, EDC 76; Mountaineering Equipment Subcommittee, EDC 76 : 1 [ Ref : Doc : EDC 76 (4375) ]

Adopted 8 October 1987 | © July 1988, BIS | 

BUREAU OF INDIAN STANDARDS
MANAK BHAVAN, 9 BAHADUR SHAH ZAFAR MARG
NEW DELHI 110002

**3.2** *Ice Piton, Plain* ( *Type* B )

All dimensions in millimetres.

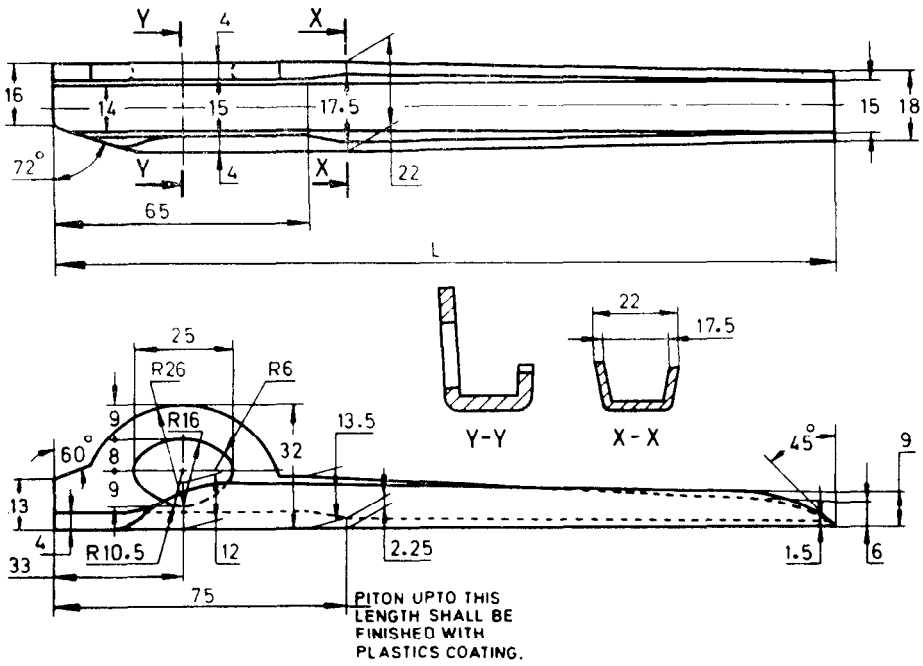


| Nominal Size | *L* |
|---|---|
| 1 | 160 |
| 2 | 200 |
| 3 | 250 |
| 4 | 300 |

**3.3** *Ice Piton, Screw (Type C)*

All dimensions in millimetres.

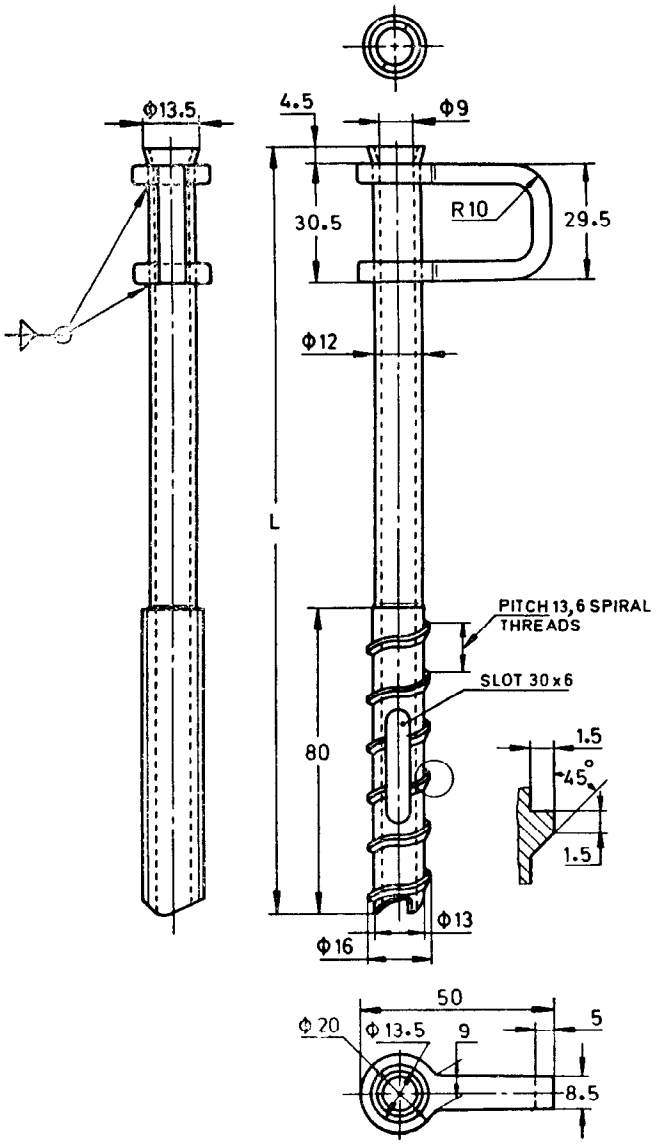


| Nominal Size | *L* |
|---|---|
| 1 | 160 |
| 2 | 200 |
| 3 | 250 |
| 4 | 300 |

**3.4** *Ice Piton, Screw ( Type* D *)*

All dimensions in millimetres.

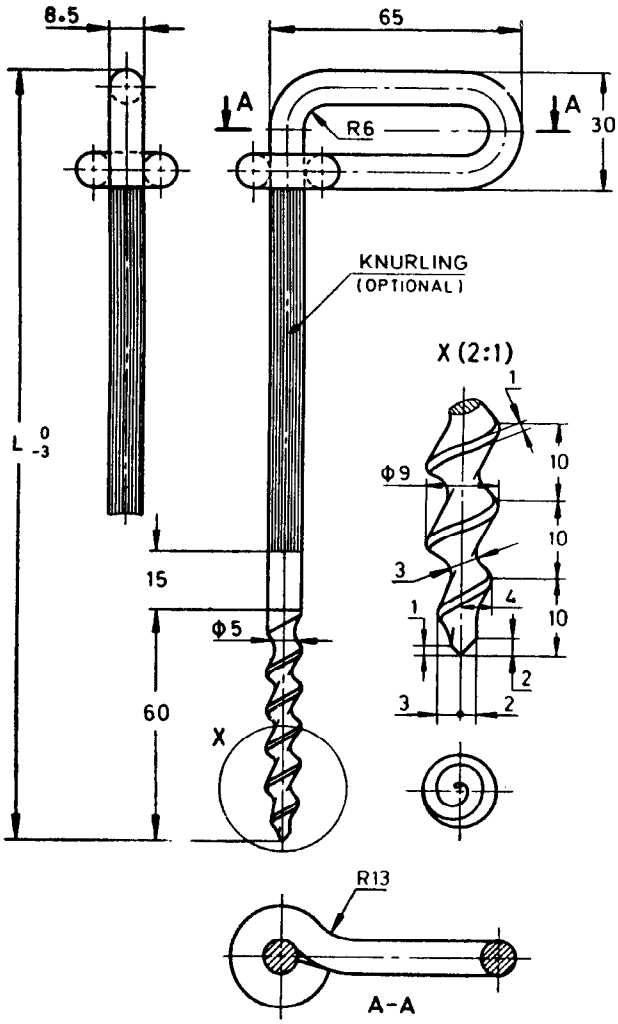


| Nominal Size | *L* |
|---|---|
| 1 | 160 |
| 2 | 200 |
| 3 | 250 |
| 4 | 300 |

**3.5** *Ice Piton, Screw ( Type* E *)*

All dimensions in millimetres.

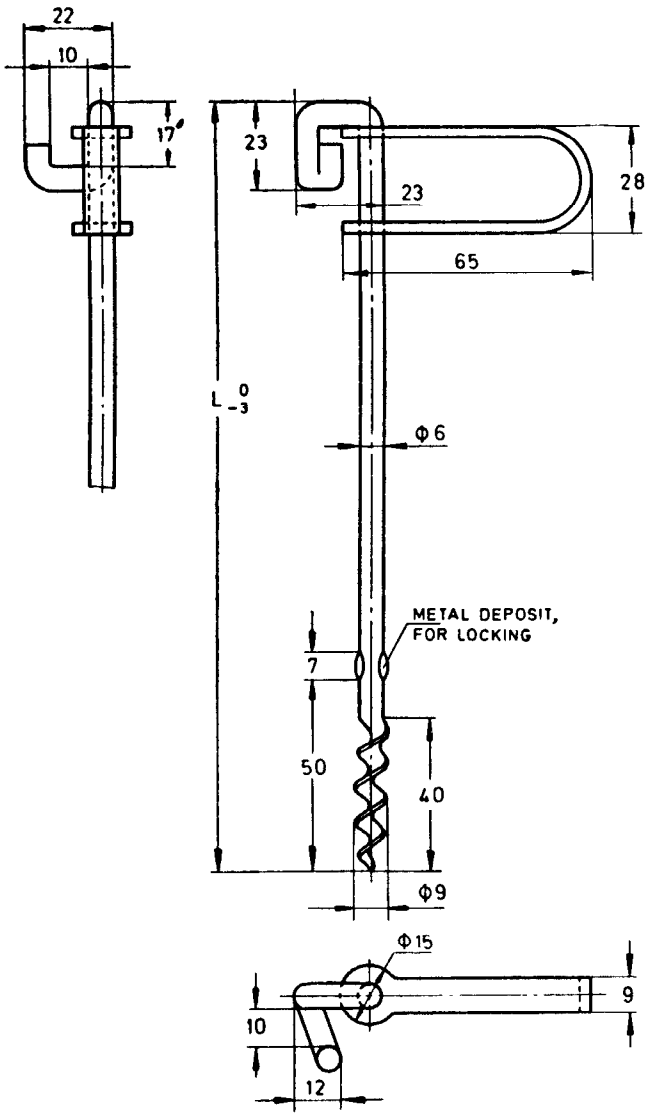


| Nominal Size | *L* |
|---|---|
| 1 | 160 |
| 2 | 200 |
| 3 | 250 |
| 4 | 300 |

**3.6** *Ice Piton, Screw (Type F)*

All dimensions in millimetres.

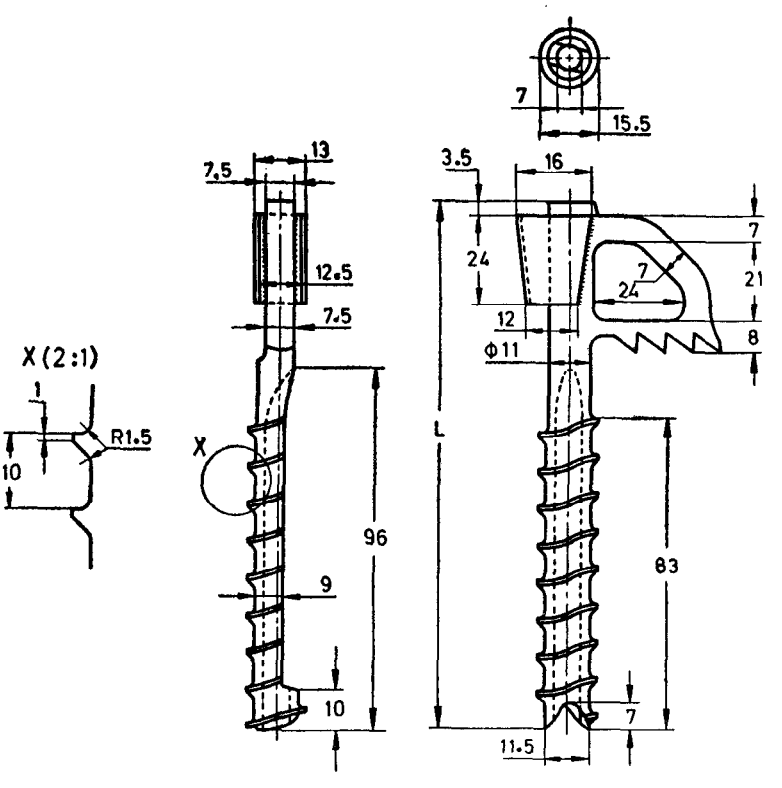


| Nominal Size | *L* |
|---|---|
| 1 | 160 |
| 2 | 200 |

**3.7** *Ice Piton, Screw ( Type* G *)*

All dimensions in millimetres.

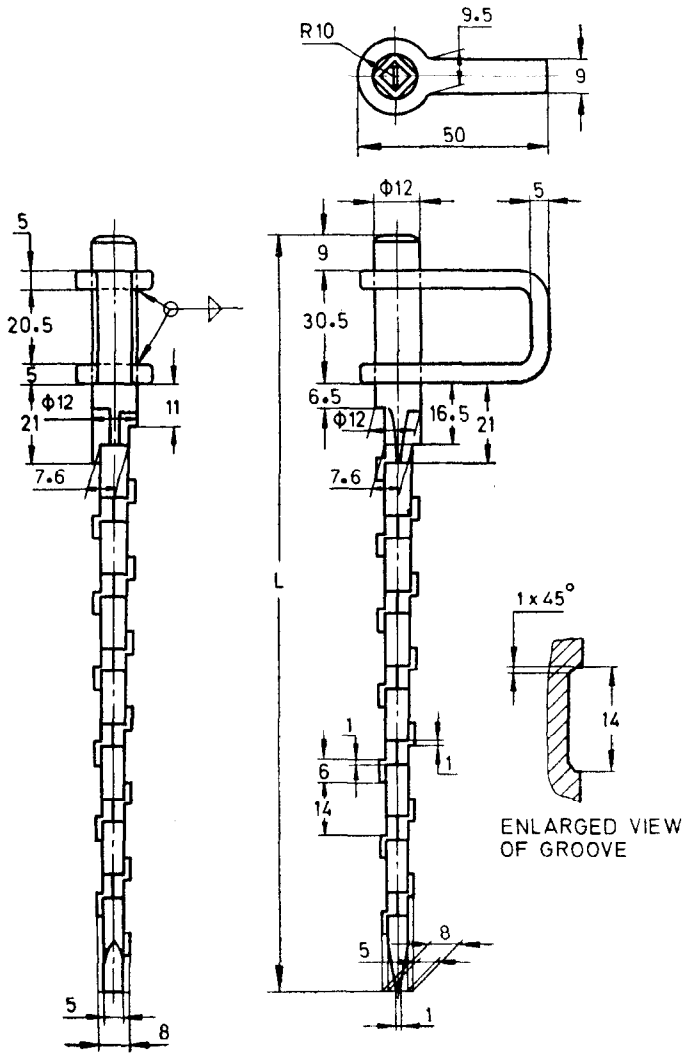


| Nominal Size | *L* |
|---|---|
| 1 | 160 |
| 2 | 200 |
| 3 | 250 |
| 4 | 300 |

**Note** -- The shapes and sizes of the ice piton greatly depend on the application. Only the dimensions for the generally used types of pitons have been given in **3.1** to **3.7**.

**4. Material** — Steel having following composition of material shall be used for the manufacture of ice piton:

| *Constituents* | *Percent* |
|---|---|
| Carbon | 0·36 to 0·44 |
| Managanese | 0·4 to 0·7 |
| Silicon | 0·1 to 0·35 |
| Nickel | 2·25 to 2·75 |
| Chromium | 0·5 to 0·8 |
| Molybdenum | 0·4 to 0·7 |

**5. Hardness** — The ice pitons shall have a hardness of 350 to 450 *HV*.

**6. Manufacture, Workmanship and Finish** — Pitons shall be finished smooth and shall be free from burrs and cracks and other defects. The holes shall be finished smooth to avoid scrapping. The pitons shall be given suitable anti-corrosive treatment.

**7. Designation** — An ice piton shall be designated by commonly used name, size (in case of more than one size) and IS number.

Example:

An ice piton of Type D and of nominal size 2 shall be designated as follows:

Ice Piton D × 2 IS : 8907

**8. Tests**

**8.1** *Strength of Piton* — A load of 13 kN shall be applied to the piton eye at right angles to the gripping surfaces for a period of 5 minutes. The pull shall be applied gradually. On completion of the test, the piton shall not show any sign of fracture or permanent deformation.

**8.2** *Crack Test* — Each ice piton shall be subjected to crack detection test.

**8.3** *Soundness Test* — The piton shall be laid flat on an anvil or mild steel block and struck several light blows at different places on the shank with ball pein hammer, 250 g. The piton shall have no sign of damage, cracking or fracture on completion of the test.

**9. Marking** — Ice pitons shall be suitably embossed or marked with acid etching with the manufacturer's name or trade-mark.

**9.1** *Standard Marking* — Details available with the Bureau of Indian Standards.

## EXPLANATORY NOTE

This standard covers various types of ice pitons used in mountaineering. This standard was first published in 1978 and has been revised to bring it in line with the current trade practices. The major changes in this revision are that of material. The changes in the material have been recommended by Research and Development Organization, Defence Metallurgical Research Laboratory, Hyderabad.



Printed at Printrade, New Delhi, India